© 2018 UniCourse Ltd. All Rights Reserved

Pearson BTEC Level 5 Higher Nationals in Engineering (RQF)

Unit 52: Further Electrical, Electronic and Digital Principles

Unit Workbook 1

in a series of 4 for this unit

Learning Outcome 1

Steady-State and AC Circuit Analysis

Sample

edexcel Approved Centre

© 2018 UniCourse Ltd. All Rights Reserved

1.1 Formal Steady-State Circuit Analysis

Determinants

When we are examining circuits with two loops, we arrive at two simultaneous equations with two unknowns. A circuit with three loops will produce three simultaneous equations with three unknowns.

For example, two loops …

$$a_1x + b_1y + c_1 = 0$$
$$a_2x + b_2y + c_2 = 0$$

The objective is to find those values for x and y. Using ***Determinants*** is usually an effective method to find these. Let's use a **D** to represent a determinant, and then explain how they are used …

$$\frac{x}{D_x} = \frac{-y}{D_y} = \frac{1}{D}$$

Where;

$$D_x = \begin{vmatrix} b_1 & c_1 \\ b_2 & c_2 \end{vmatrix} = (b_1 \times c_2) - (b_2 \times c_1)$$
$$D_y = \begin{vmatrix} a_1 & c_1 \\ a_2 & c_2 \end{vmatrix} = (a_1 \times c_2) - (a_2 \times c_1)$$
$$D = \begin{vmatrix} a_1 & b_1 \\ a_2 & b_2 \end{vmatrix} = (a_1 \times b_2) - (a_2 \times b_1)$$

The determinant of a square matrix is very useful in finding unknown quantities (like currents, voltages etc.) in systems of equations. Let's see if we can find the determinant for an actual 2 X 2 matrix…

$$\begin{vmatrix} 6 & -2 \\ 3 & 4 \end{vmatrix} = (6 \times 4) - (-2 \times 3) = 24 + 6 = 30$$

Notice that the determinant has been placed within special symbols $\begin{vmatrix} \quad \end{vmatrix}$.

What we do is to multiply the numbers on the leading diagonal (6 X 4) and then subtract the numbers on the other diagonal (-2 X 3). That obviously gives 30. This is non-zero, so that tells us that the solution should be unique (i.e. we can easily find the unknown quantities).

A few more examples…

$$\begin{vmatrix} 5 & 3 \\ 2 & 4 \end{vmatrix} = 14 \qquad \begin{vmatrix} -6 & 8 \\ 2 & -4 \end{vmatrix} = 8 \qquad \begin{vmatrix} -6 & 2 \\ 9 & 3 \end{vmatrix} = -36 \qquad \begin{vmatrix} 3 & 18 \\ 2 & 12 \end{vmatrix} = 0$$

Sample

edexcel Approved Centre

© 2018 UniCourse Ltd. All Rights Reserved

Now let's see what happens with the determinant of a 3 x 3 matrix. Each cell (element) in a 3 x 3 matrix has a **minor**, which is found by covering up the corresponding row and column which contains that minor, and then evaluating its determinant. Let's look at an example …

$$\begin{bmatrix} 1 & 2 & 3 \\ 4 & 5 & 6 \\ 7 & 8 & 9 \end{bmatrix}$$

The minor of element 4 is obtained by covering up its row and column, like this …

$$\begin{bmatrix} 1 & 2 & 3 \\ 4 & 5 & 6 \\ 7 & 8 & 9 \end{bmatrix}$$

Now remove those red elements and we have …

$$\begin{bmatrix} 2 & 3 \\ 8 & 9 \end{bmatrix}$$

Change this matrix into a determinant and that will be the minor of element 4 …

$$\begin{vmatrix} 2 & 3 \\ 8 & 9 \end{vmatrix} = (2 \times 9) - (3 \times 8) = 18 - 24 = \mathbf{-6}$$

So, the minor of element 4 is -6.

There is still a bit more to consider. We have a sign associated with each minor, and this is really important. Let's see how this sign 'pattern' works …

$$\begin{pmatrix} + & - & + \\ - & + & - \\ + & - & + \end{pmatrix}$$

We see that element 4 lives on row 2 column 1, which requires a '-' sign. We therefore need to write …

$$-(-6) = 6$$

Once we introduce the sign to a minor we call it the **cofactor**.

Now we are in a position to evaluate the determinant of a 3 x 3 matrix. Let's look at an example …

Sample

edexcel Approved Centre

© 2018 UniCourse Ltd. All Rights Reserved

$$\begin{vmatrix} 4 & 2 & -1 \\ 6 & -2 & 0 \\ 1 & -4 & 8 \end{vmatrix}$$

We can actually pick any row or column we like to determine the sum of products of any row or column and its cofactors. Why make life hard for ourselves when we see that there is a 0 in column 3, row 2; making those multiplications zero and shortening our work. Here's how it goes …

$$\begin{vmatrix} 4 & 2 & -1 \\ 6 & -2 & 0 \\ 1 & -4 & 8 \end{vmatrix} = -6\begin{vmatrix} 2 & -1 \\ -4 & 8 \end{vmatrix} + (-2)\begin{vmatrix} 4 & -1 \\ 1 & 8 \end{vmatrix} + 0\begin{vmatrix} 4 & 2 \\ 1 & -4 \end{vmatrix}$$

$$= -6\begin{vmatrix} 2 & -1 \\ -4 & 8 \end{vmatrix} + (-2)\begin{vmatrix} 4 & -1 \\ 1 & 8 \end{vmatrix}$$

$$= -6\big((2 \times 8) - (-1 \times -4)\big) - 2\big((4 \times 8) - (-1 \times 1)\big)$$

$$= -6(16 - 4) - 2(32 - -1)$$

$$= -6(12) - 2(33)$$

$$= -72 - 66 = \mathbf{-138}$$

Please test this out with this online calculator. You will find that it is correct.

Now we are in a position to put determinants to very good use in our circuit analyses …

Mesh Analysis

When we talk of a 'steady state' DC analysis we are effectively saying that all capacitors are fully charged and all inductors have fully energised their magnetic fields. In this scenario, capacitors can be replaced with open circuits and inductors replaced with short circuits.

What this means is that should we have a steady-state series RC circuit connected across a battery, because the capacitor is considered to be open circuit in the steady state, no current flows – all of the battery voltage is across the capacitor.

Sample

edexcel Approved Centre

© 2018 UniCourse Ltd. All Rights Reserved

If we considered a steady-state series RL circuit connected across a battery, because the inductor is considered to be a short circuit in the steady-state, the resistor will effectively be connected directly across the battery – current will be given by the battery voltage divided by the resistor value.

A circuit mesh is simply a closed loop. Let's look at a circuit which contains two meshes …

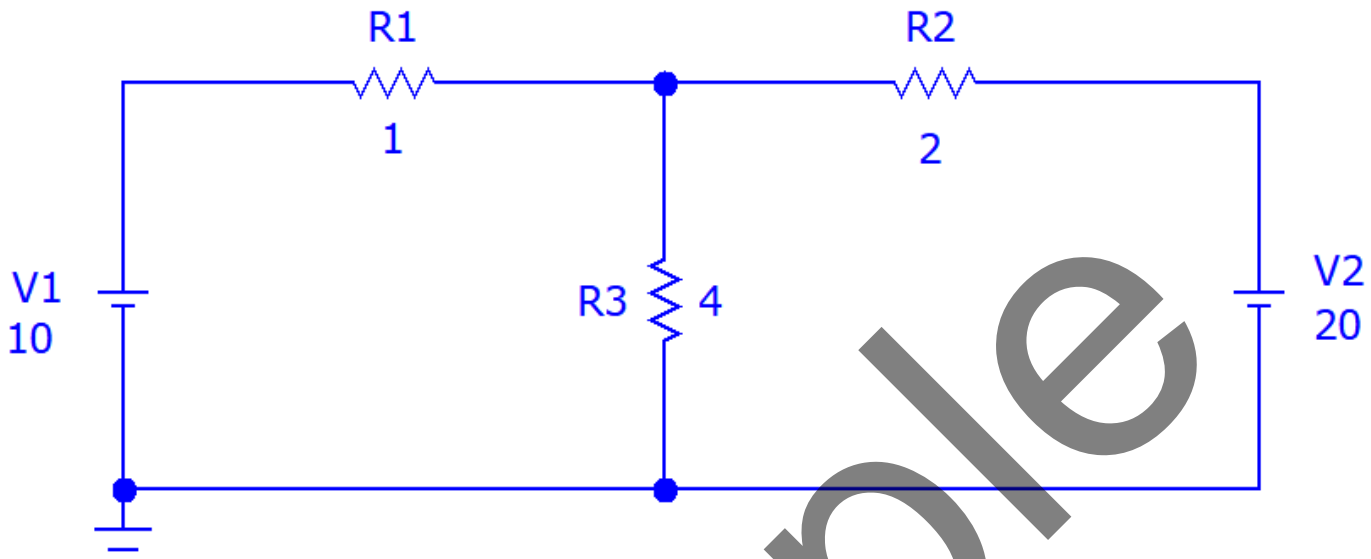

Figure 1: *A two-mesh DC circuit*

Here V1, R1 and R3 form mesh 1. V2, R2 and R3 form mesh 2. Let's indicate the circulating currents in each mesh …

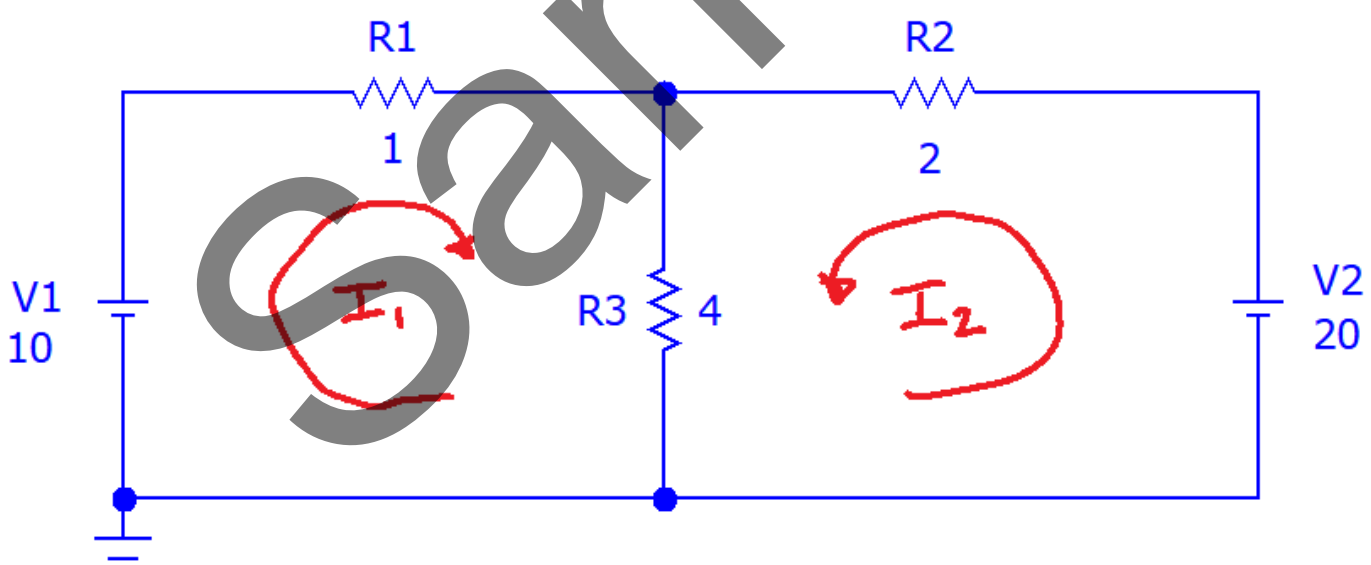

Figure 2: *A two-mesh DC circuit with circulating currents*

In mesh analysis we remember Kirchoff's Voltage Law (KVL) – the sum of voltages in any closed loop (mesh) is zero. With this in mind, let's start the analysis of these meshes.

Sample

© 2018 UniCourse Ltd. All Rights Reserved

Mesh 1

$$I_1R_1 + (I_1 + I_2)R_3 = 10$$

$$\therefore \quad (R_1 + R_3)I_1 + R_3I_2 - 10 = 0$$

Put in the resistor values…

$$5I_1 + 4I_2 - 10 = 0 \quad [\mathbf{1}]$$

Mesh 2

$$I_2R_2 + (I_2 + I_1)R_3 = 20$$

$$\therefore \quad R_3I_1 + (R_2 + R_3)I_2 - 20 = 0$$

Put in the resistor values…

$$4I_1 + 6I_2 - 20 = 0 \quad [\mathbf{2}]$$

Let's bring together equations [1] and [2] because they describe the circuit behaviour, and will form the basis of our analysis using determinants.

$$5I_1 + 4I_2 - 10 = 0 \quad [\mathbf{1}]$$

$$4I_1 + 6I_2 - 20 = 0 \quad [\mathbf{2}]$$

The determinants are …

$$D_{I1} = \begin{vmatrix} 4 & -10 \\ 6 & -20 \end{vmatrix} = (4 \times -20) - (-10 \times 6) = -80 - -60 = -80 + 60 = -20$$

$$D_{I2} = \begin{vmatrix} 5 & -10 \\ 4 & -20 \end{vmatrix} = (5 \times -20) - (-10 \times 4) = -100 - -40 = -100 + 40 = -60$$

$$D = \begin{vmatrix} 5 & 4 \\ 4 & 6 \end{vmatrix} = (5 \times 6) - (4 \times 4) = 30 - 16 = 14$$

Earlier we discovered …

$$\frac{x}{D_x} = \frac{-y}{D_y} = \frac{1}{D}$$

But, we are not using x and y here, so we replace them with I_1 and I_2 …

$$\frac{I_1}{D_{I1}} = \frac{-I_2}{D_{I2}} = \frac{1}{D}$$

Sample

edexcel Approved Centre

© 2018 UniCourse Ltd. All Rights Reserved

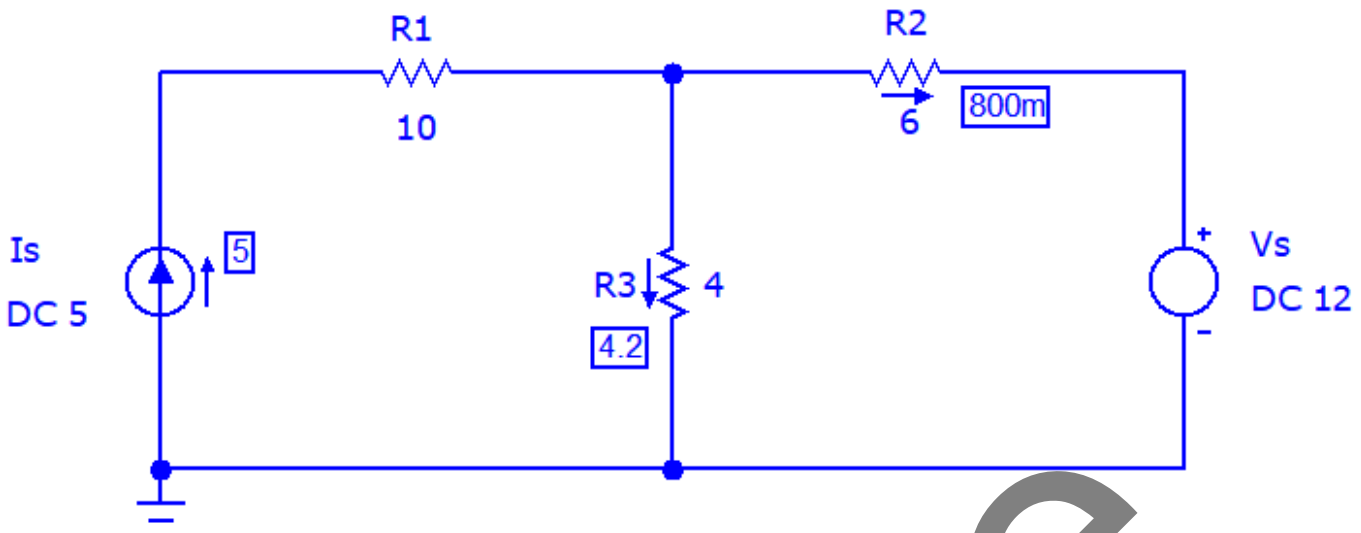

Figure 8c: *Simulated circuit showing currents for Figure 8*

Complex Notation, Polar/Cartesian Forms and Phasor Diagrams

When we have circuits containing just resistors then life is so easy in terms of circuit analysis. Most useful circuits also contain capacitors and inductors (usually coils and windings). The introduction of capacitors and inductors into circuits causes 'phase angles' in our calculations. The study of these phase angles is made much easier by introducing complex numbers.

From your level 3 studies you will have come across Inductive Reactance (X_L) and Capacitive Reactance (X_C). These terms are used to quantify the amount of 'opposition' caused by capacitors and inductors to changes in current or voltage. The term 'reactance' is brought about because capacitors cannot be fully charged or discharged in zero time, and inductors cannot be fully energised or de-energised in zero time. A good analogy for capacitors is the amount of water in a bathtub. It is impossible to fill a bathtub in zero time, and it's also impossible to empty a bathtub in zero time. The amount of reactance from capacitors and inductors is a function of their manufactured properties and the frequency of operation. Let's review the equations for these reactances...

$$X_L = 2\pi f L \quad [\Omega]$$

$$X_C = \frac{1}{2\pi f C} \quad [\Omega]$$

where;

$X_L = inductive\ reactance\ (measured\ in\ Ohms, \Omega)$

$X_C = capacitive\ reactance\ (measured\ in\ Ohms, \Omega)$

$f = frequency\ (measured\ in\ Hertz, Hz)$

$L = inductance\ (measured\ in\ Henries,$ H)

$C = capacitance\ (measured\ in\ Farads, F)$

Sample

© 2018 UniCourse Ltd. All Rights Reserved

Consider the RLC circuit below…

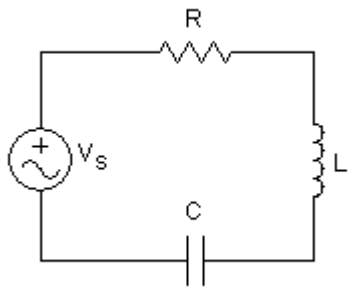

Figure 9: Series *RLC circuit*

We can draw a phasor diagram for this circuit, as follows…

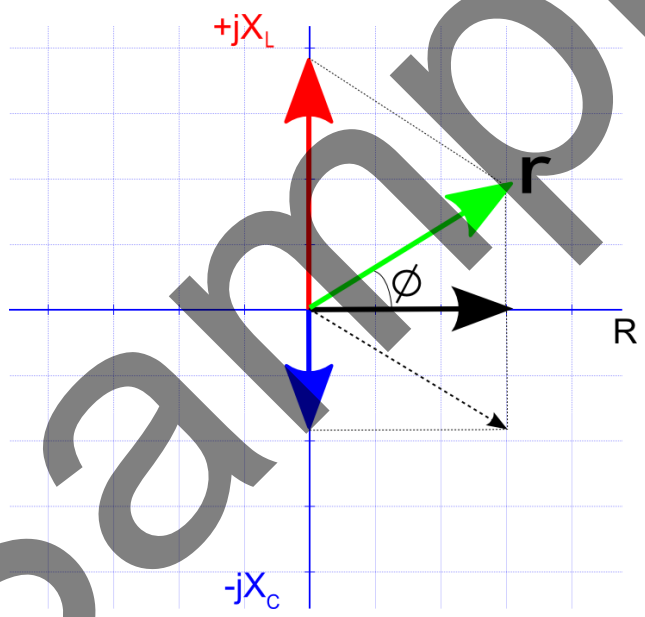

Figure 10: Phasor diagram for series *RLC circuit*

The black arrow represents resistance. The current through a resistor is always in phase with the voltage across it. We place resistance on the horizontal axis.

The red arrow represents inductive reactance. We see that this *leads* the resistance by 90 degrees ($\pi/2\ rads.$). We name this axis the '+j axis'. Mathematicians tend to designate this the '+i' (imaginary) axis. Engineers do not use i since it clashes with the current symbol, so we use 'j' instead.

The blue arrow represents capacitive reactance. We see that this *lags* the resistance by 90 degrees ($\pi/2\ rads.$). We designate this the '-j' axis.

Sample

© 2018 UniCourse Ltd. All Rights Reserved

The dashed lines represent a graphical method of finding the resultant of these phasors, drawn in green. We term this resultant the *impedance* of the circuit and mark it with 'r' for resultant. This resultant impedance makes an angle with the horizontal axis, marked with ϕ.

The resultant impedance is given the symbol Z for calculation purposes. We see that the green resultant has both horizontal and vertical components. The horizontal contribution is known as the *real* component and the vertical contribution is known as the imaginary component.

We may use Pythagoras' theorem to denote impedance as follows…

$$Z^2 = R^2 + X^2$$

$$\therefore \quad Z = \sqrt{R^2 + X^2} \quad [\Omega]$$

In complex number notation we represent Z as…

$$\boldsymbol{Z = R + j(X_L - X_C) \quad [\Omega]}$$

Worked Example 1

The series combination of a 100Ω resistor and a 10mH inductor form an impedance. If the circuit frequency is 10 kHz determine the impedance of the circuit in complex number form.

We have the real part already, it is 100Ω (the value of the resistor). We calculate the imaginary part of the circuit as follows…

$$X_L = 2\pi f L = 2\pi \times 10^4 \times 10 \times 10^{-3} = 628.3\Omega$$

We denote a complex number as follows…

$$\boldsymbol{complex\ number = real\ part + j(imaginary\ part)}$$

So, we may answer the question by writing…

$$\boldsymbol{Z = (100 + j628.3) \quad [\Omega]}$$

Worked Example 2

If a complex number is given by $\boldsymbol{Z = (100 + j628.3)\ [\Omega]}$ find its Polar Form.

The Polar Form is given by the length of the resultant impedance (represented by r and the green phasor above) and the associated angle (ϕ) of the resultant impedance, as follows…

Sample

© 2018 UniCourse Ltd. All Rights Reserved

$$\boldsymbol{V = 10\angle 40^o \times 3\angle 50^o \quad volts}$$

Determine the voltage in Polar form.

When faced with such a Polar multiplication the answer is again determined in a quite straightforward manner…

Polar Multiplication: Multiply the magnitudes, add the angles…

$$\boldsymbol{V = 10\angle 40^o \times 3\angle 50^o = 30\angle 90^0 \quad volts}$$

Summary of Complex Number Arithmetic

$j = \sqrt{-1}$
$j^2 = \sqrt{-1}\sqrt{-1} = -1$
$j^3 = j^2 j = (-1)j = -j$
$j^4 = j^2 j^2 = (-1)(-1) = 1$

1.2 AC Circuit Analysis

Series Resonant Circuits

Consider the series RLC circuit below.

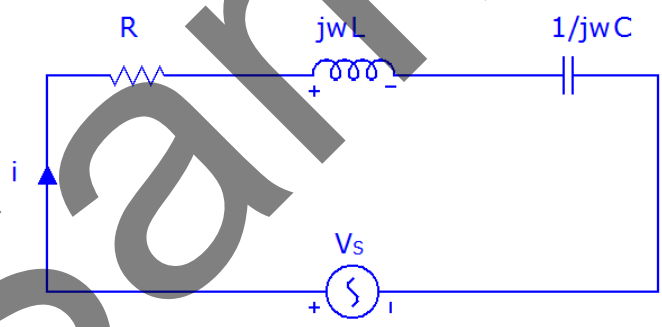

Figure 11: Series *RLC circuit*

If we examine the ***impedance*** of this circuit layout we may write…

$$Z = R + j\omega L + \frac{1}{j\omega C}$$

$$\therefore \quad Z = R + j\omega L + \frac{-j}{\omega C}$$

$$\therefore \quad Z = R + j\left(\omega L - \frac{1}{\omega C}\right)$$

Sample

© 2018 UniCourse Ltd. All Rights Reserved

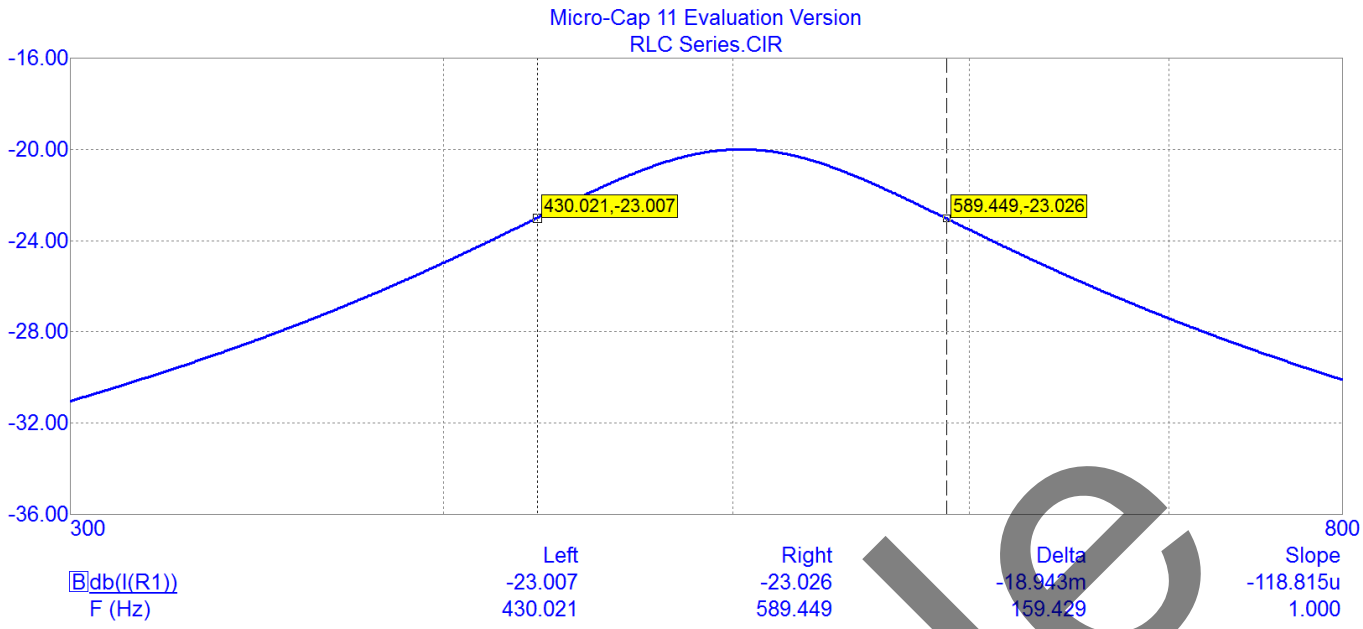

Figure 13: *Series RLC circuit frequency response*

The simulation produces very good agreement with our calculations.

The current (and its phase angle) in the circuit is also confirmed below by running a 'Dynamic AC' analysis...

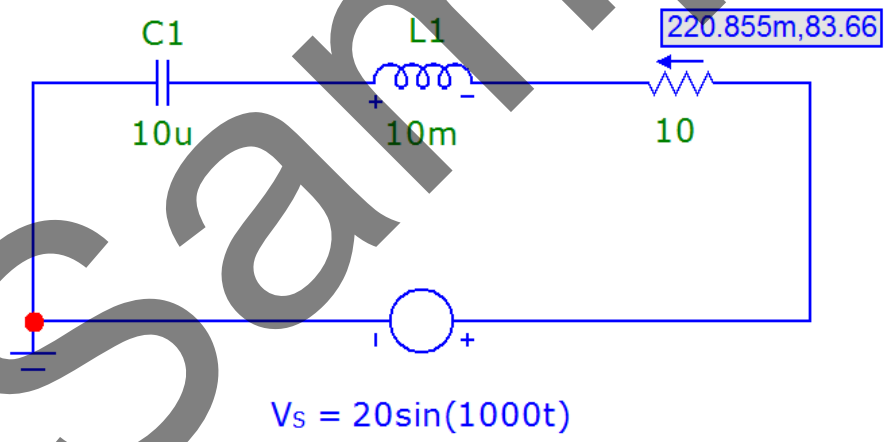

Figure 14: *Series RLC circuit*

Parallel Resonant Circuits

Consider the parallel resonant circuit below.

Sample

© 2018 UniCourse Ltd. All Rights Reserved

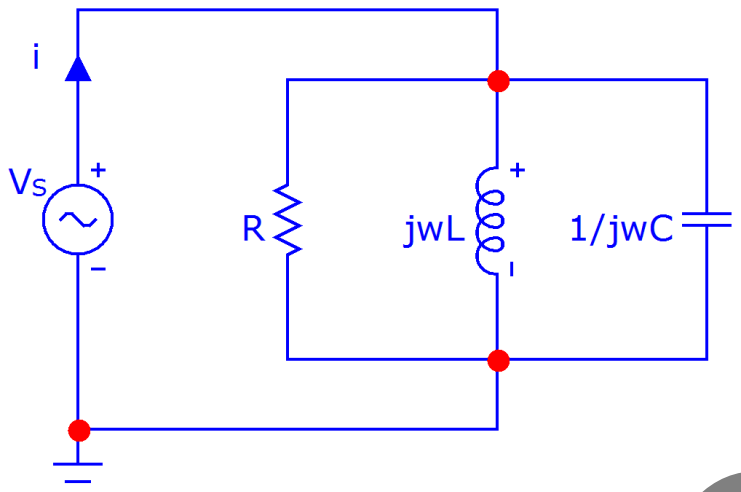

Figure 15: *Parallel RLC circuit*

We can draw a phasor diagram for this circuit, as follows…

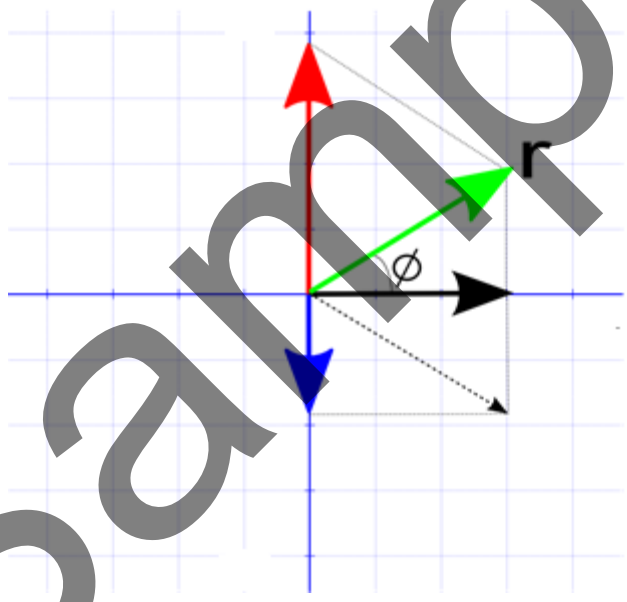

Figure 16: *Parallel RLC circuit phasor diagram*

The red phasor represents the current through the capacitor. The blue phasor represents the current through the inductor. The black phasor represents the current through the resistor. The reference phasor here is voltage, which may be drawn in the same direction as the resistor current phasor. The resultant of the resistor current phasor and the inductor current phasor is shown by the dotted arrow, and the resultant of that with the capacitor current phasor is shown by the green phasor. The green phasor represents the total current drawn from the supply. Note: phasors here are not drawn to scale.

Sample

© 2018 UniCourse Ltd. All Rights Reserved

If we examine the impedance of this circuit layout we may write…

$$\frac{1}{Z} = \frac{1}{R} + \frac{1}{j\omega L} + \frac{1}{1/j\omega C}$$

$$\therefore \quad \frac{1}{Z} = \frac{1}{R} + \frac{1}{j\omega L} + j\omega C$$

multiplying by jωLR…

$$\frac{j\omega LR}{Z} = \frac{j\omega LR}{R} + \frac{j\omega LR}{j\omega L} + (j\omega LR)(j\omega C)$$

$$\therefore \quad \frac{j\omega LR}{Z} = j\omega L + R - \omega^2 LRC$$

$$\therefore \quad Z = \frac{j\omega LR}{j\omega L + R - \omega^2 LRC}$$

$$\therefore \quad Z = \frac{j\omega LR}{R(1 - \omega^2 LC) + j\omega L}$$

From this last equation we see that the magnitude of Z will be a maximum when…

$$1 - \omega^2 LC = 0$$

$$\therefore \quad 1 = \omega^2 LC \quad \therefore \quad \omega^2 = \frac{1}{LC} \quad \therefore \quad \omega = \sqrt{\frac{1}{LC}} = 2\pi f$$

$$\therefore \quad \boldsymbol{f = f_0 = \frac{1}{2\pi\sqrt{LC}}} \qquad [\boldsymbol{Hz}]$$

We may now confidently make the following statement…

For a parallel RLC circuit at resonance the impedance is a maximum and the current is a minimum.

Notice in the circuit diagram that the voltage is the same everywhere but the currents through each component can be different. For a parallel RLC circuit we define the Q-factor as the amount of 'magnification' of current through the coil compared to the resistor…

$$Q_{parallel\ RLC} = \frac{R}{X_L}$$

Sample

© 2018 UniCourse Ltd. All Rights Reserved

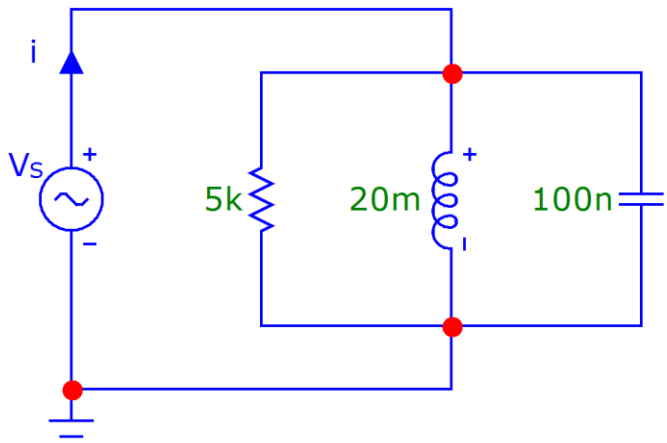

Figure 17: *Parallel RLC circuit*

a) $f_0 = \frac{1}{2\pi\sqrt{LC}} = \frac{1}{2\pi\sqrt{0.02\times100\times10^{-9}}} = 3.559kHz$

b) $Q = \frac{R}{X_L} = \frac{5000}{2\pi\times3559\times0.02} = 11.18$

c) $BW = \frac{f_0}{Q} = \frac{3559}{11.18} = 318Hz$

d) 5k in parallel with the existing 5k will give a new resistance of 2.5k. Therefore the Q-factor will halve and the bandwidth will double to 636Hz.

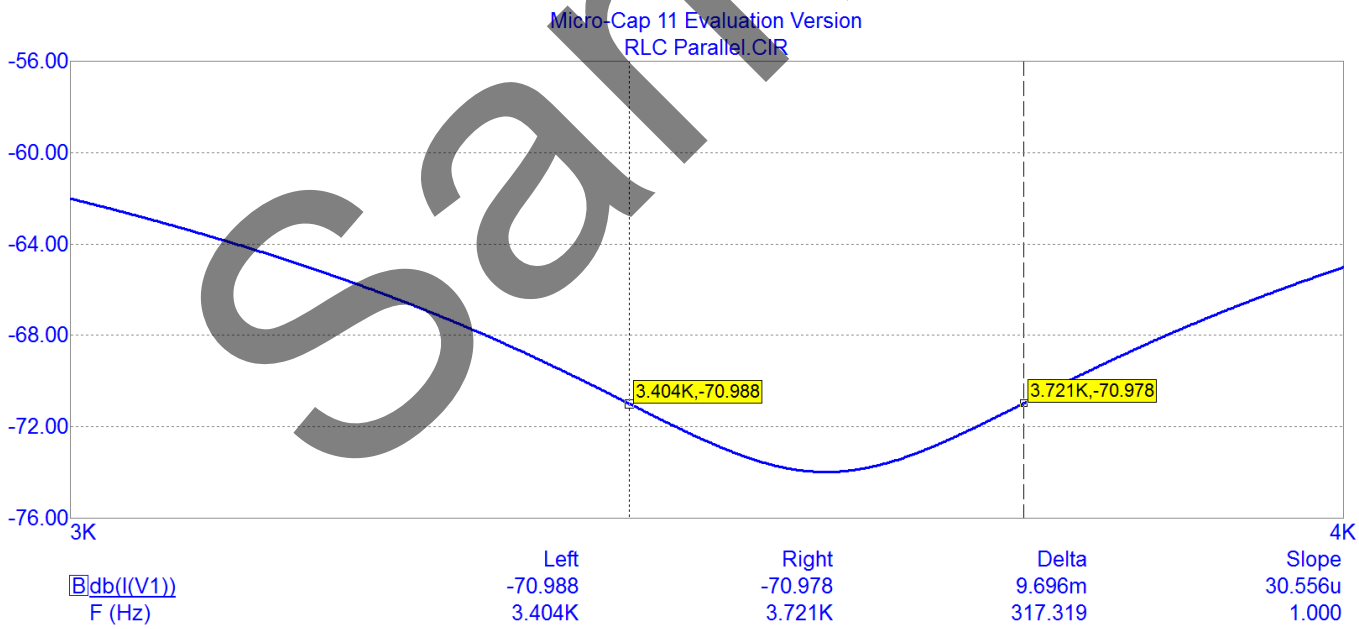

Figure 18: *Series RLC circuit frequency response*

The simulation produces very good agreement with our calculations.

Sample

© 2018 UniCourse Ltd. All Rights Reserved

Power

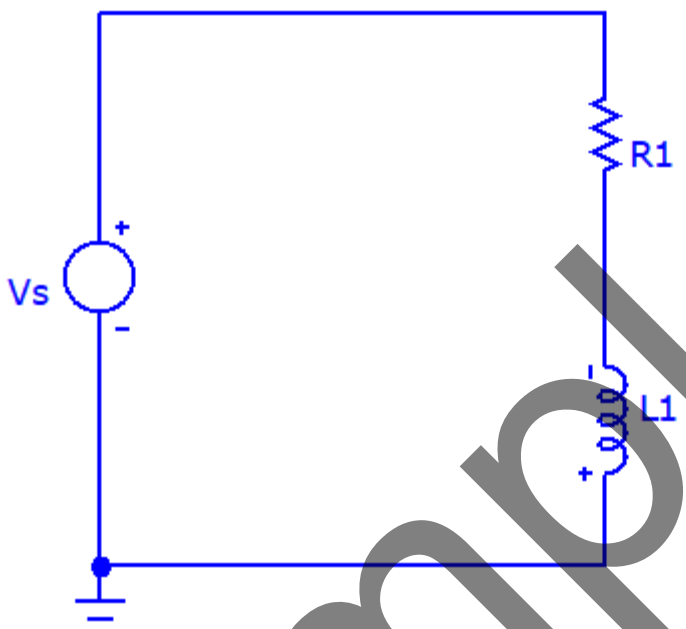

Figure 19: *Series RLC circuit*

In the circuit above we have a single-phase source. This source has a frequency of 50 Hz and a peak voltage value of 325.27 V. Usually it is not the peak voltage value which is stated for a source, but rather its root-mean-square value (its 'rms' value).

The rms value is that voltage value of the waveform which would produce an equivalent heating effect from a DC source. This voltage happens to be the peak value divided by $\sqrt{2}$.

$$v_{rms} = \frac{v_{pk}}{\sqrt{2}}$$

$$\therefore \quad v_{rms} = \frac{v_{pk}}{\sqrt{2}} = \frac{325.27}{\sqrt{2}} = 230\ V$$

Consider the phasor diagram for this series circuit…

Sample

© 2018 UniCourse Ltd. All Rights Reserved

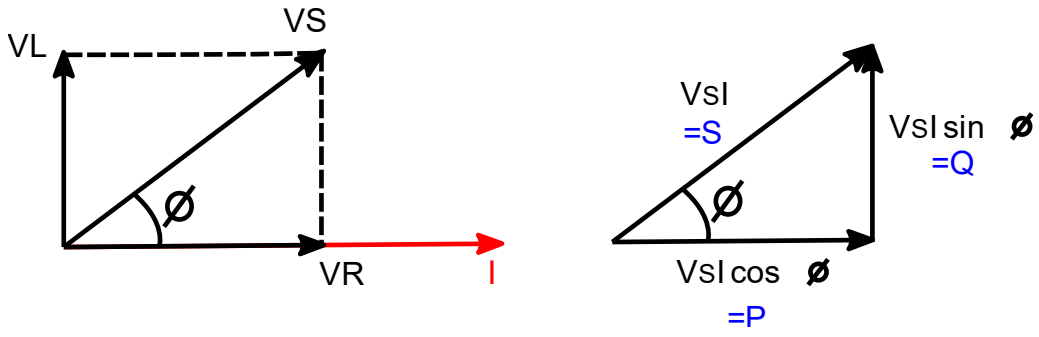

Figure 20: *Series RL circuit phasor diagram and the power triangle*

The phasor diagram, on the left, shows that the voltage across the resistor is in phase with the current. However, the voltage across the inductor leads the current by 90 degrees. The resultant of the resistor and inductor phasors is the supply phasor itself. The angle between the inductor voltage and resistor voltage is known as the phase angle, Ø.

On the right of the diagram we see what is known as the 'power triangle'. A touch of basic trigonometry and then multiplication of each phasor by current, I, yields…

$$Apparent\ power, S = V_s I \quad [VA, voltamperes]$$

$$True\ (active)\ power, P = VI\ cos\emptyset \quad [Watts]$$

$$Reactive\ power, Q = VI\ sin\emptyset \quad [var, reactive\ voltamperes]$$

The power factor, $cos\emptyset$, may be expressed as…

$$cos\emptyset = \frac{R}{Z}$$

To calculate the power dissipated in a single-phase ac circuit we may employ two formulae;

$$P = I^2 R$$

or,

$$P = VI\ cos\emptyset$$

Let's take a look at an example.

Worked Example 8

A series RL circuit is provided with current by a UK mains single-phase supply of 230 V rms, 50 Hz. If the resistor has a value of 50 Ω and the inductor a value of 100 mH, determine;

a) The inductive reactance
b) The circuit impedance

Sample